AHP-4252 | Air Conditioner/Heat Exchanger

Air Cooled
Through Mounted
Nema-12, 4, 4X

240 VAC Input
High Efficiency
2780 BTU/HR



FEATURES

- High capacity thermoelectric design
- Power saving air to air heat exchanger mode (ECO-Mode)
- Heavy duty full perimeter mounting
- Lower profile intrusion into enclosure
- Central input cord for easy mounting
- Closed loop design
- Condensate control and evaporation system
- Increased efficiency at higher ambients by as much as 10%
- Virtually maintenance free
- No compressor
- Environmentally friendly and safe
- Stainless Steel exterior housing
- Mounts and operates in any orientation
- Integral temperature controller
- Agency approvals:
- UL 60335-1 & 2-40; CSA C22.2#60335-1 & 2-40; IEC 60335-1 & 2-40

CONTROL TEMPERATURES

Active Cooling	35 °C
Heat Exchanger (ECO-Mode)	25 °C
Active Heating	10 °C
Typical Hysteresis	5 °C
Operating Ambient	-40/+65 °C
Operating Enclosure	-10/+60 °C

POWER INPUTS

Voltage	240 VAC
Current, Active	4.0 AMPS
Current , ECO-Mode	0.9 AMP
Frequency	50/60 Hz

PERFORMANCE RATINGS

Cooling (Traditional)	2780 BTU/HR
Cooling (Din 3168)	815 WATTS
Cooling COP (at L35 L35)	0.85
Heating (Traditional)	> 3270 BTU/HR
Heating (Din 3168)	> 960 WATTS
Heating COP	> 1.0
Heat Exchanger (ECO-Mode)	30 W/°C

INCLUDES

- Power supply
- Temperature controller
- Power saving heat exchanger mode (ECO-Mode)
- Mounting gasket
- Mounting hardware
- Power input cord
- Circuit breaker

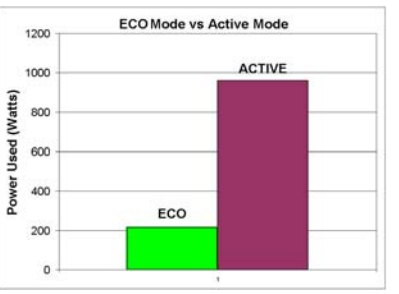

250 VDC configuration for crane applications available

CONFIGURATIONS

MODEL	PART NUMBER	NOTES	TEMPERATURE CONTROL	ENVIRONMENT
AHP-4252	0-J4J2-0-000	Cool only, industrial fans & power supply	TC-4F	NEMA-12, IP 52
AHP-4252	0-J452-0-000	Cool only, industrial fans & power supply	EXT*	NEMA-12, IP 52
AHP-4252HC	0-J4I2-1-000	Heat/Cool, industrial fans & power supply	TC-7F	NEMA-12, IP 52
AHP-4252HC	0-J452-1-000	Heat/Cool, industrial fans & power supply	EXT*	NEMA-12, IP 52
AHP-4252XE	0-J4J2-4-000	Cool only, sealed hot side fans & power supply	TC-4F	NEMA-4/4X, IP 56
AHP-4252XE	0-J452-4-000	Cool only, sealed hot side fans & power supply	EXT*	NEMA-4/4X, IP 56
AHP-4252XEHC	0-J4I2-5-000	Heat/Cool, sealed hot side fans & power supply	TC-7F	NEMA-4/4X, IP 56
AHP-4252XEHC	0-J452-5-000	Heat/Cool, sealed hot side fans & power supply	EXT*	NEMA-4/4X, IP 56
AHP-4252X	0-J4J2-2-000	Cool only, Mil. grade hot side fans & power supply	TC-4F	NEMA-4X/Harsh, IP 56
AHP-4252X	0-J452-2-000	Cool only, Mil. grade hot side fans & power supply	EXT*	NEMA-4X/Harsh, IP 56
AHP-4252XHC	0-J4I2-3-000	Heat/Cool, Mil. grade hot side fans & power supply	TC-7F	NEMA-4X/Harsh, IP 56
AHP-4252XHC	0-J452-3-000	Heat/Cool, Mil. grade hot side fans & power supply	EXT*	NEMA-4X/Harsh, IP 56

* Unit is set for 5-32 VDC external signal, relay(s) included

AHP-4252

PERFORMANCE CURVE

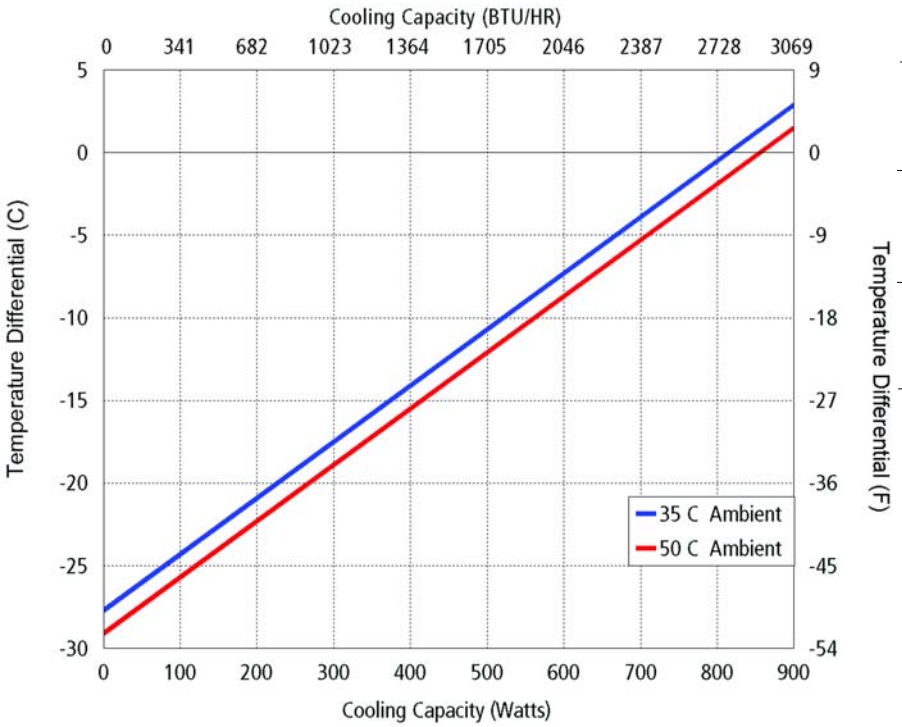

Equation of line: y=ΔT(°C) x=Capacity (Watts)		
Ambient Temp	**35°C**	**50°C**
Enclosure Air	y=.034x-27.7	y=.034x-29.1
Cold Sink	y=.026x-27.7	y=.026x-29.1

MOUNTING STYLE
Through Mounted

ENVIRONMENTS SERVED
NEMA-12 IP 52
NEMA-4,4X IP 56

RATING (TRADITIONAL)
2780 BTU/hr @ 0 °F ΔT
3892 BTU/hr @ +20 °F ΔT

RATING (DIN 3168)
815 Watts L35 L35
410 Watts L35 L50

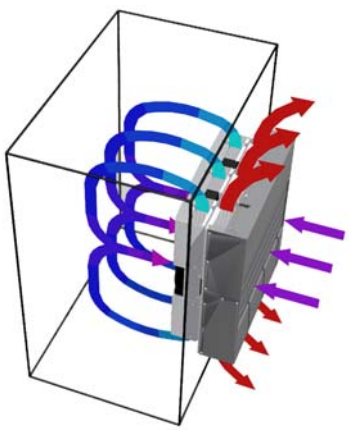

Air Flow Pattern

DIMENSIONS

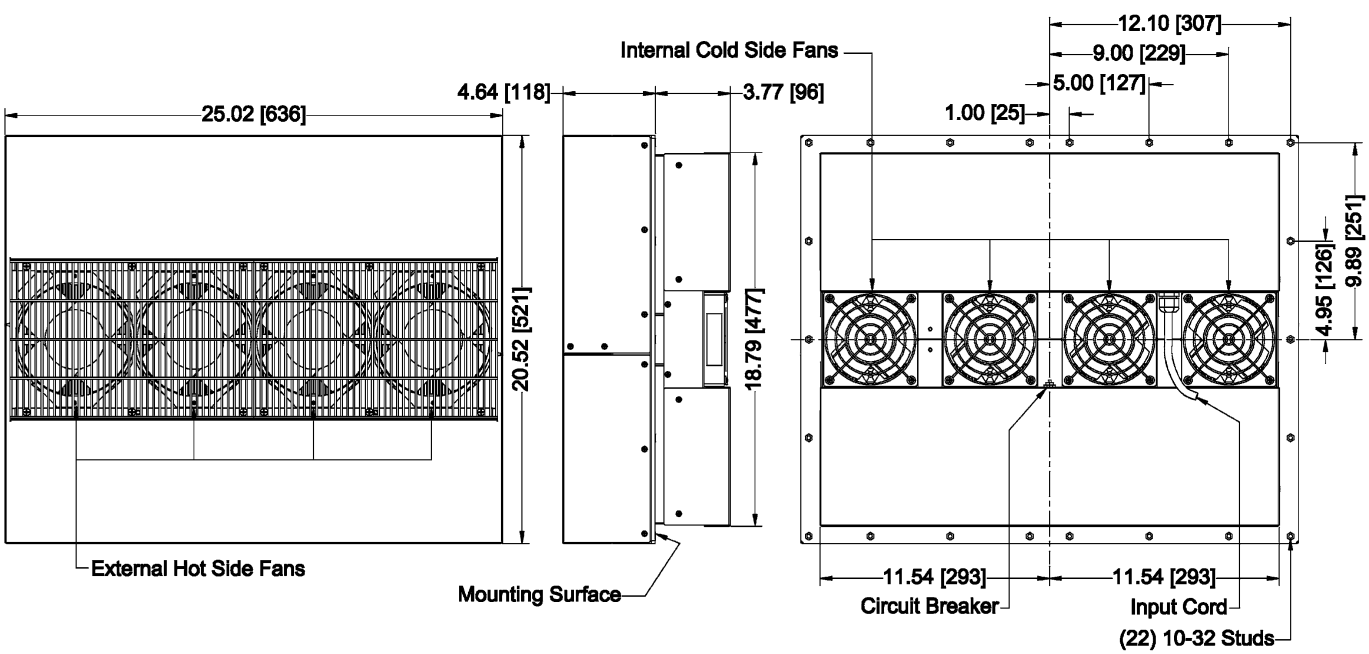

Dimensions do not include hardware
Mounting hardware and gasket included but not shown
Dimensions: Inches [Millimeters]

Mounting Cutout
23.20X18.90 [589X480]